OPERATOR'S AND PARTS MANUAL

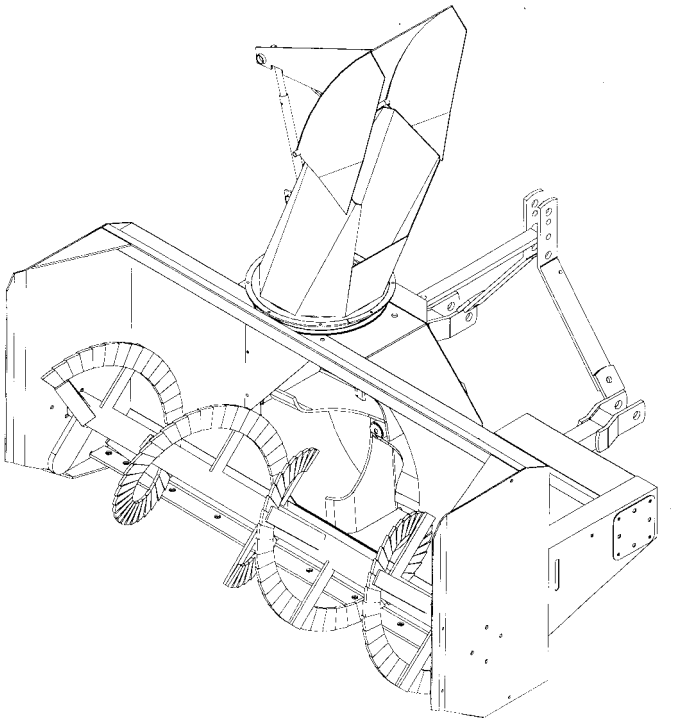

SNOWBLOWER

SA74 & SA80 MODELS

SERIAL NO. 9800101 AND UP

OM 0273-A
10/01

BER-VAC

by RAD Technologies Inc.

TABLE OF CONTENT

INTRODUCTION – TO THE PURCHASER 3

SECURITY 4
- Before Operation 4
- Notice 5
- The Snowblower 5
  - Before Operation 5
  - Snowblower operation 6
- The Tractor 7
  - General Information 7
  - Operating the Tractor 7
  - During Operation 7
- Maintenance 8
- Transporting 8
- Storage 8

DECALS 9

ASSEMBLY 10
- Snowblower Assembly 10
  - Three Point Hitch Installation 10
  - Snowblower Installation 11
  - Driveline Installation 11
  - Detaching Snowblower 11
  - Hydraulic Rotation with Cylinder – Kit 8046 12
  - Manual Rotation – Kit 8051 13

OPERATION 14
- General Preparation 14
- Operating Controls 14
  - Raising and lowering the snowblower 14
  - Drive Shaft Operation 14
  - Deflector Adjustment 14
  - Skid Shoes Adjustment 14
  - Reduction Chain Tension Adjustment 14
  - Work and Travel Speed 14
- Snow Removal Methods 15

TABLE OF CONTENT

MAINTENANCE 16
Maintenance 16
Storage 16
Lubrication 16

PARTS 17
Introduction 17
Frame and Related Parts – SA74 & SA80 18
Semi-Industrial Chute 21
Manual Rotation – Kit 8051 22
Hydraulic Rotation by Cylinder – Kit 8046 23
Gearbox (662195) 24
Driveline (662538) 25

WARRANTY 26

TORQUE SPECIFICATION TABLE 27

INTRODUCTION

TO THE PURCHASER

All BER-VAC and BLIZZARD products are designed to give safe, dependable service if they are operated and maintained according to instructions. **Read and understand this manual before operation.**

This manual has been prepared to assist the owner and operators in the safe operation and suitable maintenance of the implements. The information was applicable to products at the time of manufacture and does not include modifications made afterwards.

Read and understand this operator's manual before attempting to put an implement into service. Familiarize yourself with the operating instructions and all the safety recommendations contained in this manual and those labeled on the implements and on the tractor. Follow the safety recommendations and make sure that those with whom you work follow them.

Illustrations

The illustrations may not necessarily reproduce the full detail and the exact shape of the parts or depict the actual models, but are intended for reference only

Direction Reference

Right Hand and Left Hand are determined by those seen by the conductor looking at the machine while operating.

To assist your dealer in handling your needs, please record hereafter the model number and serial number of your implement and tractor. It is also advisable to supply them to your insurance company. It will be helpful in the event that an implement or tractor is lost or stolen.

MODEL : _____

SERIAL NUMBER : _____

DATE OF PURCHASE : _____

SAFETY PRECAUTIONS

SAFETY FIRST

This symbol, the industry's "Safety Alert Symbol", is used throughout this manual and on labels on the machine itself to warn of the possibility of personal injury. Read these instructions carefully. It is essential that you read the instructions and safety regulations before you attempt to assemble or use this unit.

DANGER : Indicates an immediately hazardous situation which, if not avoided, will result in death or serious injury.

WARNING : Indicates a potentially hazardous situation which, if not avoided, could result in death or serious injury.

CAUTION : Indicates a potentially hazardous situation which, if not avoided, may result in minor or moderate injury.

IMPORTANT : Indicates that equipment or property damage could result if instructions are not followed.

NOTE : Gives helpful information.

All products are designed to give safe, dependable service if they are operated and maintained according to instructions. **Read and understand this manual before operation**. It is the owner's responsibility to be certain anyone operating this product reads this manual., and all other applicable manuals, to become familiar with this equipment and all safety precautions. Failure to do so could result in serious personal injury or equipment damage. If you have any questions, consult your dealer.

BEFORE OPERATION

Children

Tragic accidents can occur if the operator is not alert to the presence of children. Children are generally attracted to machines and the work being done. Never assume children will remain where you last saw them.

1. Keep children out of the operating area and under the watchful eye of another responsible adult.
2. Be alert and turn machine off if children enter the work area.
3. Before and when backing, look behind and look for small children.
4. Never carry children while operating the machine. They may fall off and be seriously injured or interfere with safe operation of the machine.
5. Never allow children to play on the machine or attachment even when turned off.
6. Never allow children to operate the machine even under adult supervision.
7. Use extra care when approaching blind corners, shrubs, trees, or other obstructions that might hide children from sight.

NOTICE

A safe operator is the best insurance against accidents. All operators, no matter how experienced they may be, should read this Operator's Manual and all other related manuals before attempting to operate an implement. Please read the following section and pay particular attention to all safety recommendations contained in this manual and those labeled on the implements and on the tractor.

THE SNOWBLOWER

Before Operation

1. Read and understand this operator's manual and tractor operator's manual. Know how to operate all controls and how to stop the unit and disengage the controls quickly.

2. Never wear loose, torn, or bulky clothing around the tractor and implement. It may catch on moving parts or controls, leading to the risk of accident.

3. Before the snow season, thoroughly inspect the area where the equipment is to be used and remove all doormats, sleds, boards and other foreign objects.

4. Disengage clutch and shift into neutral before starting the engine.

5. Do not operate equipment in wintertime without wearing adequate winter garments.

6. Never attempt to make any adjustments while engine is running. Read this manual carefully to acquaint yourself with the equipment as well as the tractor operator's manual. Working with unfamiliar equipment can lead to accidents. Be thoroughly familiar with the controls and proper use of the equipment. Know how to stop the unit and disengage the controls quickly.

7. Keep all shields in place and properly tighten all mounting hardware.

8. Periodically, inspect all moving parts for wear and replace with authorized service parts if an excessive amount of wear is present.

9. Replace all missing, illegible, or damaged safety and warning decals. See list of decals in the operator's manual.

10. Do not modify or alter this equipment or any of its components, or any equipment function without first consulting your dealer.

11. Keep safety decals clean of dirt and grime.

Snowblower Operation

1. Before leaving the tractor unattended, take all possible precautions. Disengage the PTO, stop the engine and remove the ignition key. Lower the implement to the ground.
2. Before starting the snowblower, remove any ice that has accumulated in the auger/impeller.
3. Watch carefully for foreign objects that could enter the blower while operating.
4. Be sure the clutch switch/lever is in OFF position before starting engine.
5. Do not put hands or feet near rotation parts. Keep clear of discharge opening at all times.
6. Exercise extreme caution when operating on or crossing a gravel drive, walks, or roads. Stay alert for hidden hazards or traffic. Do not carry passengers.
7. Adjust collector housing height to clear gravel or crushed rock surface.
8. Stop the engine, remove the key, and allow the rotating parts to stop before unclogging the collector/impeller housing or chute, and making any repairs, adjustments or inspections. Use only a 36" long piece of wood to unclog blower.
9. If the snowblower starts to vibrate abnormally, stop the engine immediately and check for cause. Excessive vibration is generally a sign of trouble.
10. Do not run the engine indoors except when starting engine and transporting attachment in or out of building. Carbon monoxide gas is colorless, odorless and deadly.
11. Exercise extreme caution when changing direction on slopes. Do not attempt to operate on steep slopes.
12. Never operate snowblower without guards, and other safety protective devices in place.
13. Never operate snowblower near glass enclosures, automobiles, window wells, embankments, etc., without proper adjustment of snow discharge angle.
14. Never operate machine at high transport speeds on a slippery surface.
15. Use extra caution when backing up.
16. Do not direct discharge at bystanders or animals. Ejected objects may cause injury.
17. Disengage power to auger/impeller when transporting or when not in use.
18. Never operate the snowblower without good visibility and lighting.
19. Prolonged exposure to loud noise can cause impairment or loss of hearing. Wear a suitable hearing protective device such as earmuffs or earplugs to protect against objectionable or uncomfortable noises

THE TRACTOR

General Information

1. Read the operator's manual carefully before using tractor. Lack of operating knowledge can lead to accidents.
2. Do not permit anyone but the operator to ride on the tractor. There is no safe place for extra riders.

Operating the Tractor

1. Never run the tractor engine in a closed building without adequate ventilation, as the exhaust fumes are very dangerous.
2. Never allow an open flame near the fuel tank or battery.
3. Make sure the shield is installed when using a PTO-driven equipment and always replace the shield if damaged.
4. Always bring the tractor to a complete stop, shut off the engine, lower the implement to the ground and remove the ignition key before leaving the tractor.
5. Never park the tractor on a steep slope.
6. Do not attempt to operate on steep slopes.
7. Use of tire chains for better traction and stability is recommended.
8. Always drive the tractor at speeds compatible with safety, especially when operating over rough ground, crossing ditches, or when turning.
9. Handle fuel with care, as it is highly flammable.
10. Use approved fuel container.
11. Never add fuel to a running engine or a hot engine.
12. Fill fuel tank outdoors with extreme care. Never fill fuel tank indoors. Replace fuel cap securely and wipe up spilled fuel.
13. Never allow anyone to operate the snowblower until they are thoroughly familiar with basic tractor and snowblower operation.
14. Make sure the tractor is counterweighted as recommended by your dealer. Weights provide the necessary balance to prevent tip-over or loss of traction or steering.
15. Always make sure all snowblower components are properly installed and securely fastened BEFORE operation.

During Operation

1. Do not allow anyone to ride on the tractor/snowblower at any time. There is no safe place for passengers on this equipment. The operator MUST sit in the tractor seat.
2. Eye and hearing protection is recommended when operating the snowblower.
3. Operate only during daylight hours, or when the area is well lit with bright artificial light.
4. Disengage the PTO (turn to “OFF”), place the transmission in neutral, set the parking brake, shut off the engine and remove the key, and make sure rotating components have stopped BEFORE leaving the operator’s seat.
5. Inspect the snowblower after striking any foreign object to assure that all snowblower parts are safe and secure and not damaged.

MAINTENANCE

1. Park the tractor/snowblower on level ground, set the parking brake, disengage the PTO, shut off the engine, remove the key, and lower the implement to the ground BEFORE making any snowblower adjustments.
2. To avoid injury, do not adjust, unclog or service the snowblower with the tractor engine running. Making sure rotating components have completely stopped before leaving the operator's seat
3. Keep the tractor/snowblower clean. Snow and ice build-up can lead to malfunction or personal injury from thawing and refreezing in garage.
4. Always wear eye protection when cleaning or servicing the snowblower.
5. Do not work under any part of the tractor or snowblower, unless it is securely supported by safety stands.
6. Make sure all shields and guards are securely in place following all service, cleaning, or repair work.
7. Do not modify or alter this equipment or any of its components or operating functions. If you have questions concerning modifications, consult with your dealer.

TRANSPORTING

1. If the tractor/snowblower is to be driven on public roads, it must be equipped with an SMV (Slow Moving Vehicle) sign. Check local traffic codes that may apply to unit usage on public roads and highways in your area.
2. Be alert for all other traffic when driving the tractor/snowblower on public roads or highways.

STORAGE

Before storing the snowblower, certain pre-cautions should be taken to protect it from deterioration.

1. Clean the snowblower thoroughly.
2. Make all the necessary repairs.
3. Replace all Safety Signs that are damaged, lost, or otherwise become illegible. If a part to be replaced has a sign on it, obtain a new safety sign from your dealer and install it in the same place as on the removed part.
4. Repaint all parts from which paint has worn or peeled.
5. Lubricate the snowblower as instructed under **"Lubrication"** section.
6. When the snowblower is dry, oil all moving parts. Apply oil liberally to all surfaces to protect against rust.
7. Store in a dry place.

DECALS

Replace Immediately If Damaged.

656779

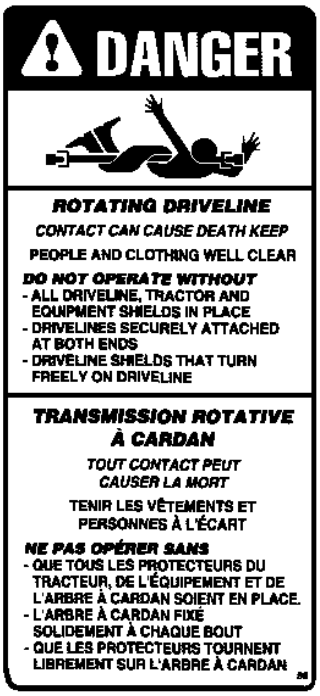

656781

656780

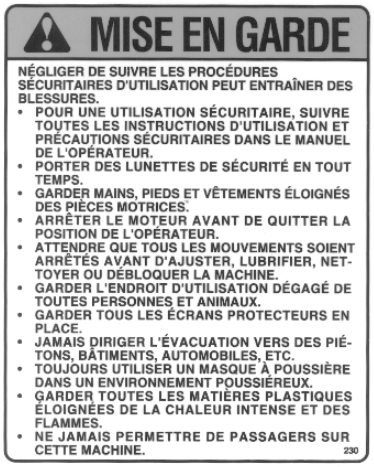

660989

660988

Included with Option 8046

664548

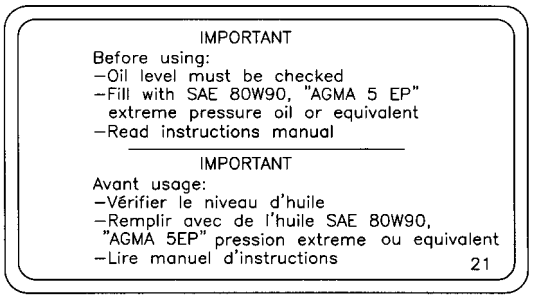

655834

2500316

SNOWBLOWER ASSEMBLY

The snowblower is assembled at the factory, however, snowblower kits must be assembled. Use the present manual and lay out all parts for assembly. Separate bolts and nuts into various sizes. After assembly, torque all the bolts according to the Torque Specification Table enclosed at the end of the manual.

Three Point Hitch Installation

Figure below:

1. Remove the 5/8'' NC x 5'' bolts , lockwashers and nuts from the upper hitch tubes of the snowblower. Install the lower left hitch and lower right hitch (items 47-70) on snowblower using the preceding bolts, lockwashers and nuts.

Note : Attaching plates have two holes. Use holes depending on tractor lower link. length to provide a minimum of 6 inches between ground and driveline when snowblower is attached.

2. Install the attaching plates (Item 50) to the lower hitches (Items 40-71) using the top holes. Secure with two 3/4'' NC x 2'' bolts (Item 40), lockwashers and nuts.
3. Fasten each attaching plate (Item 50) to the upper hitch (Item 51) using a 3/4'' NC x 4'' bolt (Item 47) lockwasher and nut.
4. Attach upper hitch (Item 51) to the attaching plate (fig 1, item 3) of the snowblower using two 3/4'' NC x 2 1/2'' bolts (Item 41), lockwashers and nuts.
5. Install the driveline storage chain (Item 45) in the small hole of each attaching plate (Item 50) using the two ''S'' hooks. Using pliers, close ''S'' hooks, leaving one side of one ''S'' hook open to be able to attach and detach.

Note: We recommend you install the storage chain (Item 45) only when you intend storing your snowblower. Operating your snowblower with it attached may be hazardous.

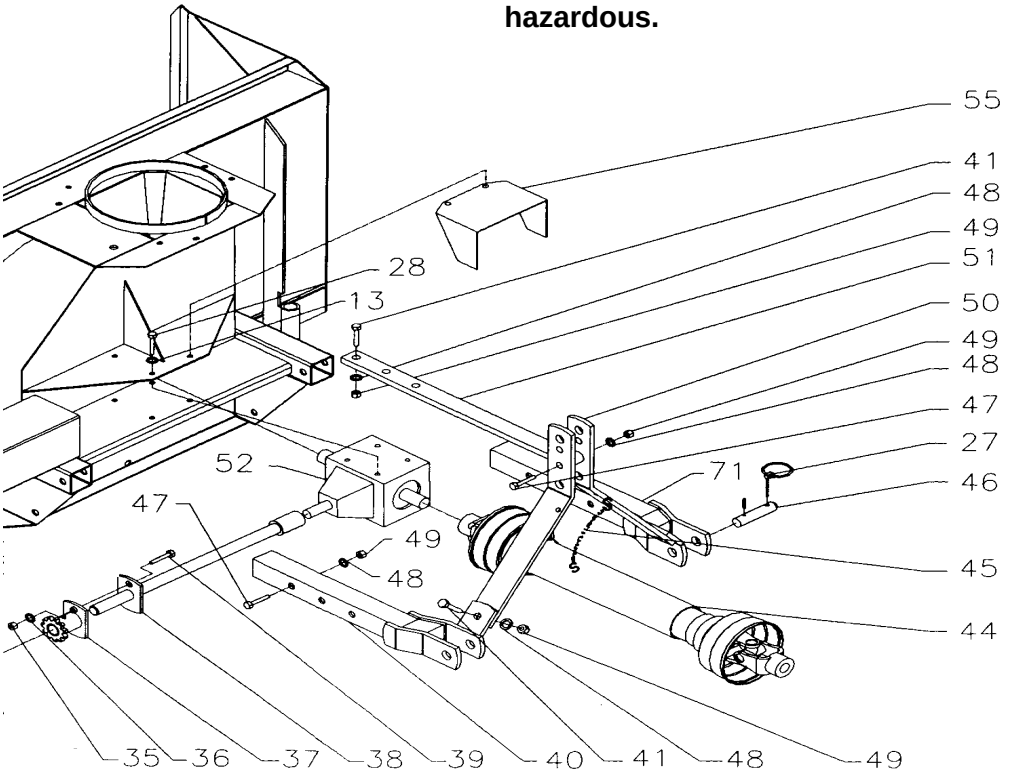

Three Point Hitch Installation

ASSEMBLY

Snowblower Installation

Figure below:

1. Attach tractor lower hitch arms (fig.2,item 1) to snowblower attaching arms (fig.2,item 7) using the hitch pins (fig.2,item 2) and secure with roll pins (fig.2,item 3) and linchpins (fig.2,item 4).
2. Install the tractor upper hitch (fig.2,item 5) in top hole of snowblower hitch arms (fig.2,item 9) using tractor pins (fig.2,item 6) and linchpin (fig.2,item 5).
3. To level snowblower front to back, adjust level using the tractor upper hitch (fig.2,item 5).
4. To level side to side, use leveling crank on right lower lift arm.
5. Set tractor anti-sway turnbuckles so that snowblower does not sway. Be sure the turnbuckles clear the tractor tires.

CAUTION: Before connecting snowblower driveline to tractor drive shaft, make sure driveline is not too long in raised, lowered and middle position. If the driveline is too long it must be shortened, to avoid damaged to tractor.

6. Connect driveline to tractor PTO shaft, making sure that the driveline locking collar is well secured to the tractor.
7. Secure driveline safety chain to tractor master shield to prevent driveline shield from rotating.
8. Before operating the snowblower, raise the parking stand from the ground.

Note: Depending on tractor used, it may be necessary to install front tractor weights to maintain front end stability.

Driveline Installation

1. Remove paint from snowblower gear box drive shaft and grease driveline sliding surfaces and yoke.
2. Remove the two bolts of the yoke and slide driveline yoke over drive shaft using sliding action of the driveline. Make sure the driveline is well secured to the drive shaft by replacing the two bolts and tightening them according to the torque specification table.

Detaching Snowblower from Tractor:

Select a level surface to detach. Lower the parking stand. Remove driveline shaft and support it with chain. Detach top link using adjustment as required. Detach right lower link using adjustable link to assist if necessary. Detach left lower link.

IMPORTANT: To avoid damage to the snowblower, retorque all bolts after the first 10 hours of operation.

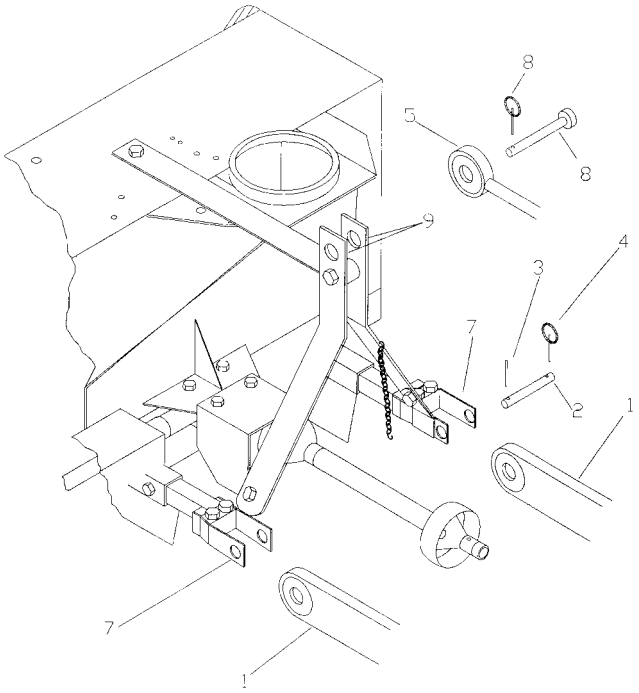

Hydraulic Rotation with Cylinder - Kit 8046 (*Figure below ⬇*)

1. Attach the chute with the retaining plates and spacers, and fasten with six 1/2"NC x 1 1/4"LG bolts, lockwashers and nuts (items 13-8-7). Do not tighten immediately.
2. Fasten the cylinder bracket (item 1) on the 17/32" holes in the snowblower housing with a 1/2"NC x 1 1/4" LG bolt, hex. nut , lockwasher and flatwasher (items 13-7-8-10).
3. Install the spacer (item 4) on the frame. Insert a bushing (item 5) in the hole of the bell crank (item 2). Slide the bell crank between the flat bars of the cylinder bracket opposite the 13/16"dia. hole.
4. **For SA74 & SA80:** Insert the upper three points attaching plate in the opening located behind the frame. Secure with a 3/4" lockwasher (item 15) and a 3/4"NC x 5" lg bolt (item 12), as shown on figure below. Tighten securely.
5. **For B84 & B94:** Fasten everything with a 3/4"NC x 4 1/2" lg bolt (item 12), lockwasher and nut (items 15-16), as shown on figure below. Tighten securely.
6. Install the push arm (item 3) by sliding it under the flat bar welded to the chute, and insert a flat washer 9/16" (item 10) and a 1/2" x 3/4" x 3/8"NC shoulder screw (item 11) under the part. Tighten with a 7/16" flat washer and a 3/8"NC stover nut (items 6-9) leaving some movement to the push arm.
7. Slide the other push arm end between the bell crank flat bars, and insert a 1/2" x 1" x 3/8"NC shoulder screw (item 14) under the part. Tighten with a 9/16" dia. hole flat washer, a 7/16" flat washer and a 3/8"NC stover nut (items 10-6-9) leaving some movement to the mechanism.

Note: Grease the base of the chute regularly to avoid premature wear.

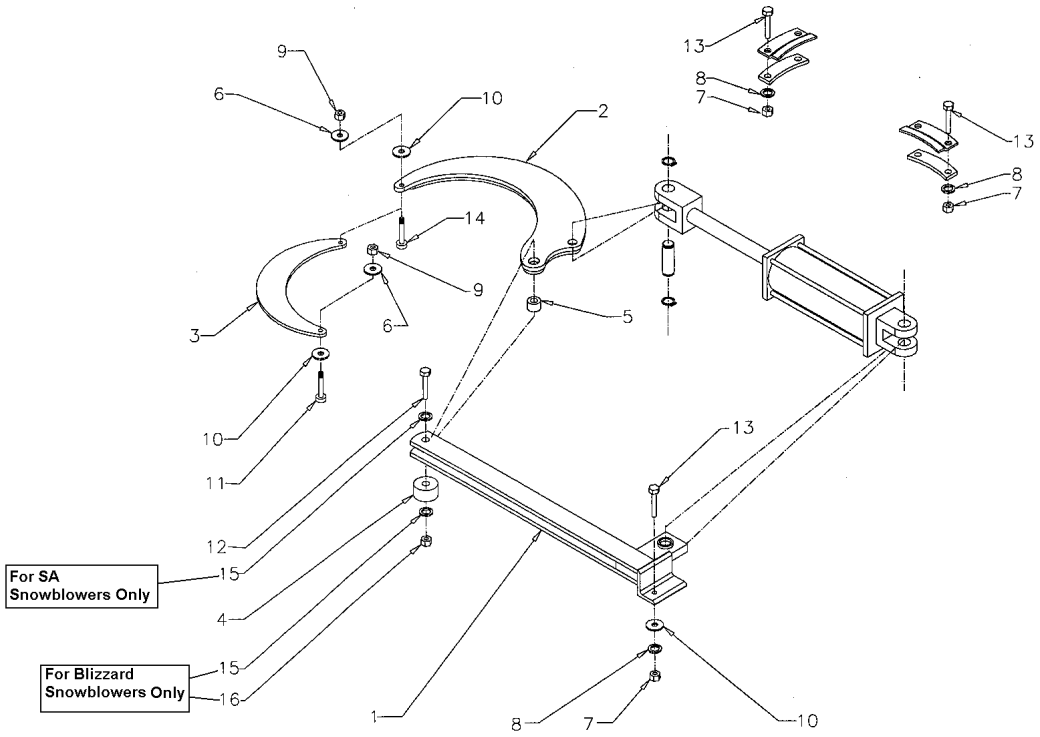

Manual Chute Rotation – Kit 8051

Figure below ↓

1. Grease base of chute then place chute on top of it. Install the three retaining plates using six 1/2" x 1 1/4" bolts (item 14), lockwashers and nuts (items 7-8).
2. Install attaching plate (item 1) with a 3/4"NC x 2 1/2" bolt (item 2), lockwashers and nuts (items 3-4), and a 1/2"NC x 1 1/2" bolt (item 9), lockwasher and a 1/2"NC hex. nut (items 8-7) in the appropriate holes.
3. Install manual rotation bracket (item 10) on flatbar, left side of chute. Secure with a 5/8" x 2 1/2" bolt (item 17), two 11/16" flat washers and nylon nut (items 5-6) on the left side, and a 1/2"NC x 1 3/4" bolt (item 11), lockwasher and nut (items 8-7) on the right side.

CAUTION: To avoid personal injury, check the full lifting range of the snowblower, to ensure that the chute rotation handle is clear of the operator's area when the snowblower is in raised position.

Cable Installation

Figure below ↓

1. Place deflector opening parallel to front of blower.
2. Turn deflector opening to the right, clockwise, approximately 40 degrees.
3. Tape ends of cable (item 15) with electrical tape to keep ends from fraying.
4. Pass the cable through the rotation tube (item 12) keeping an 8" spare length and locking it temporarily with the cable clamp (item 16).
5. Turn the cable one full turn around the chute base in a clockwise direction.
6. Pass the cable through the two small holes of the base of the chute, with an in and out motion.
7. Continue to route the cable by passing it under the pulley (item 19).
8. Turn the chute in the opposite direction (same angle of 40 degrees) by turning the rotation handle (item 13) counter clockwise keeping a proper cable tension with the free hand.
9. Detach the cable clamp (item 16). Place between the two holes securing the two ends of the cable. Be sure the ends of the cable are under proper tension.

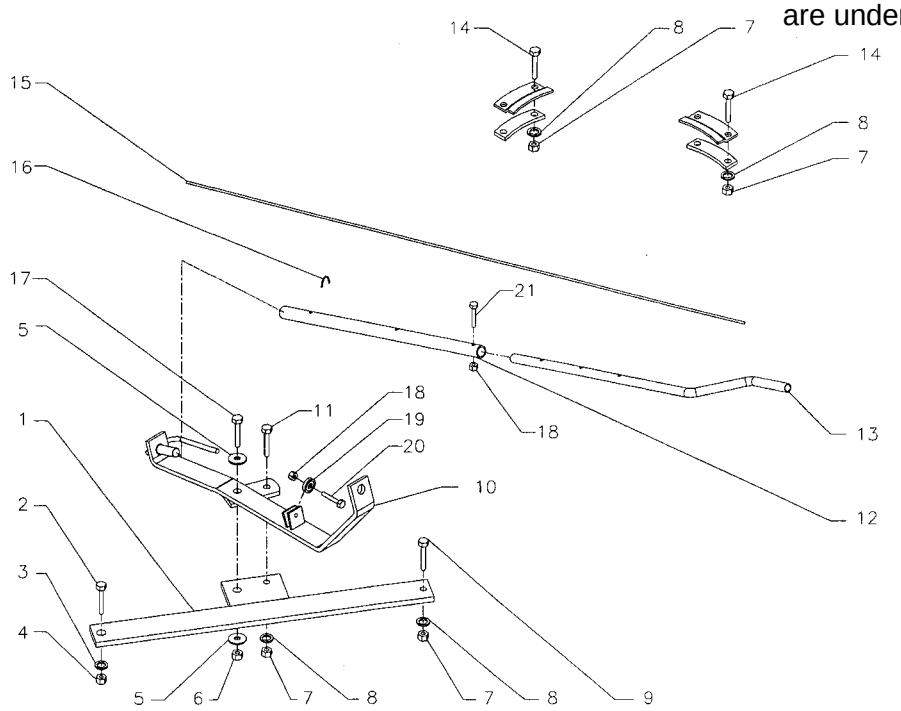

OPERATION

GENERAL PREPARATION

1. Read the operator's manual carefully before using the tractor and snowblower. Be thoroughly familiar with the controls and proper use of the equipment. Know how to stop the unit and disengage the controls quickly.
2. Make sure the snowblower is clear of snow before engaging the driveline.
3. Make sure the auger and fan operate freely.
4. Check the oil level in the worm gear box and if necessary, add SAE 80W90 gear oil, AGMA 5EP oil or equivalent.
5. Check the shearbolts, on each auger section, between the fan and on the gearbox for proper tightness.
6. If so equipped, adjust so that the snowblower skid shoes run level.
7. Wear adequate winter outer garments while operating equipment.

OPERATING CONTROLS

Work and Travel Speed

Working ground speed will depend on the depth and density of the snow to be cleared. Normally, ground speed will range from 4 to 7 MPH for light, dry snowfalls 3 to 6 inches, and 1 to 3 MPH for heavy, wet or drifted snow. To transport, disengage the driveshaft and raise the snowblower to full transport height.

Raising and Lowering the Snowblower

Move the three point lever on right hand side of seat down or forward to lower, and up or rearward to raise.

Drive Shaft Operation

The mid drive shaft is activated by pulling up the drive shaft lever on left side of seat. Push down to disengage.

Manual Rotation (if so equipped)

Turning the handle clockwise turns the chute in a clockwise direction.

WARNING: To avoid personal injury, be sure the tractor engine is off, the drive shaft disengaged, and all movement has stopped before making any adjustments.

Deflector Adjustment

Set the angle of deflection according to the distance the snow must be thrown. To set the deflector angle, loosen the hair pin and adjust the tube to the appropriate hole. Put back the hair pin in place.

Reduction Chain Tension Adjustment

The premature wear of the chain may be caused by tension being too tight. It is therefore important not to tighten chain to its maximum.

- To adjust the tension on the drive chain, loosen the bolt (see figure below, item 1), securing the idler sprocket to the snowblower housing.

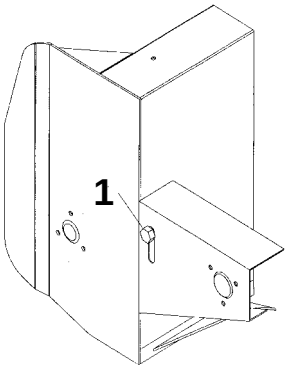

- To tighten the chain, lower the bolt. Leave approximately 1/8" deflection in one span of the chain. Retighten securely the bolt holding the idler sprocket.

Skid Shoes Adjustment (if so equipped)

Adjust the snowblower so that the skid shoes run level and according to the surface conditions so that stones are not thrown with the snow. Adjust both skid shoes to the same height to keep the cutting edge level and adjust upwards for smooth surfaces.

Loosen skid shoe bolts and adjust according to instructions below, and securely tighten bolts:

Clearance between cutting edge and surface

- Level paved surface : Adjust to 1/16" to 1/8"
- Uneven or gravel surface: Adjust to 1/2" to 5/8"

SNOW REMOVAL METHODS

WARNING: Do not use hands or feet to unplug chute. Do not attempt to clear plugged chute of snow while tractor engine is running. If the chute plugs, disengage the drive shaft, shut off the tractor engine, remove the ignition key, wait for all movement to stop, and then clear the snow from the chute.

A definite pattern of operation is required to thoroughly clean the snow area. These patterns will avoid throwing snow in unwanted places as well as eliminating a second removal of snow.

PATTERN 1

DISCHARGE SNOW BOTH SIDES

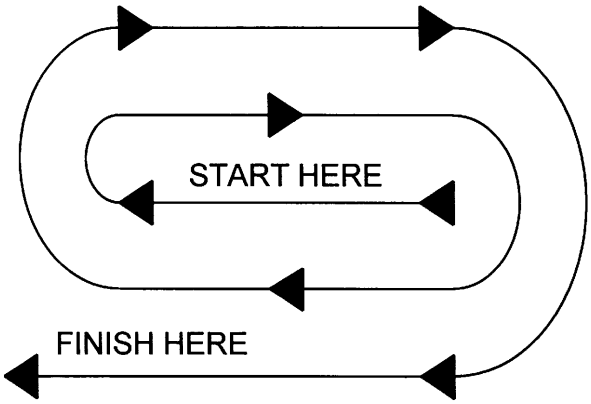

Where it is possible to throw the snow to the left and right (above), as on a long driveway, it is advantageous to start in the middle. Plow from one end to the other, throwing snow to both sides without changing the direction of the discharge guide

PATTERN 2

DISCHARGE SNOW THIS SIDE ONLY

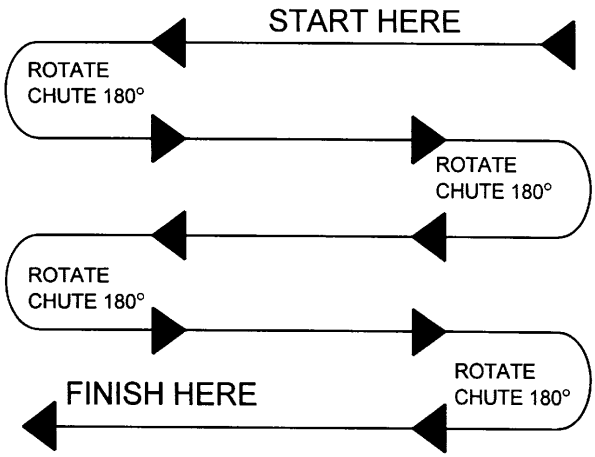

If the snow can only be thrown to one side of the driveway or sidewalk (above), start on the opposite side. At the end of the first pass, rotate the discharge guide 180 degrees for the return pass. At the end of each succeeding pass, rotate the discharge guide 180 degrees to maintain direction of throw in the same area.

MAINTENANCE

Storage

1. Check the shear bolts at frequent intervals for proper tightness to be sure the blower is in safe working condition.
2. Never store the tractor with fuel in the fuel tank inside a building where open flame or sparks are present. Allow the engine to cool before storing in any enclosure.
3. Run the snowblower a few minutes after blowing snow to prevent freeze up of the auger and the impeller.

WARNING: Provide adequate blocking before working under the snowblower when in the raised position.

Driveline

IMPORTANT: When the snowblower is not used for more than two weeks, perform driveline maintenance and always store it in a dry place, away from bad weather conditions.

Lubrication *(see Figure below)*

1. **GEAR** : Check the oil level in the worm gear drive every month. If necessary add SAE 80W90 gear oil, AGMA 5EP oil or equivalent.
2. **AUGER SECTIONS** : Grease the fitting on each auger sections every 24 hours of operation or once a year.
3. **REDUCTION CHAIN** : Lubricate with chain saw lubricant every 4 hours of operation and after each use.
4. **DRIVELINE (S)** : Grease each u-joint fitting every 8 hours of operation. Slide drive shaft apart and coat sliding surfaces with grease every 8 hours of operation.
5. **ROTATION SHAFT** : Grease the shaft each 8 hours of operation.

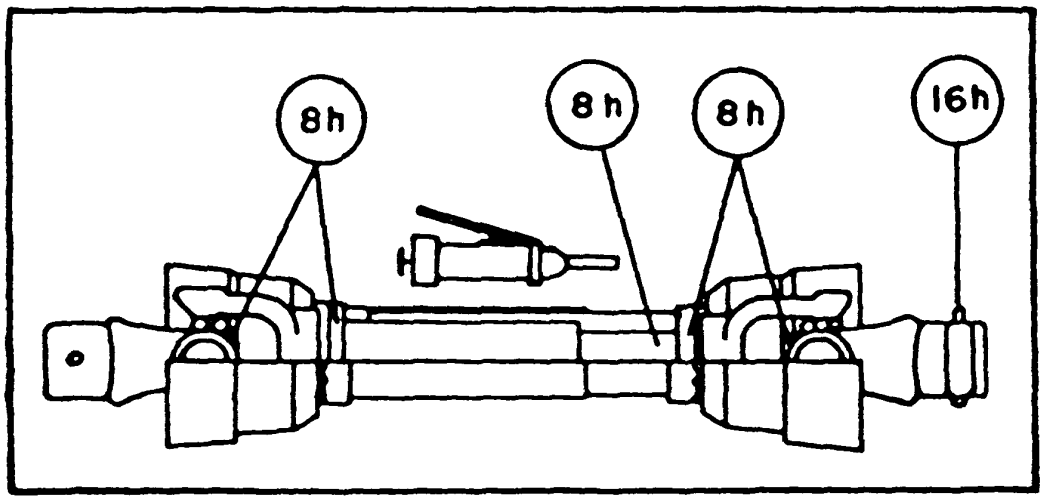

PARTS

INTRODUCTION

All parts are illustrated in "exploded views" which show the individual parts in their normal relationship to each other. Reference numbers are used in the illustrations. These numbers correspond to those in the "Reference Number" (REF) column, and are followed by the description and quantity required.

O/L - "Obtain Locally" in the part number column indicates common hardware that is available at your local hardware supply.

All reference to right and left, forward or rearward, are from the operator's seat, facing the steering wheel.

Orders must give the complete description, correct part number, the total amount required, the serial number, the method of shipment and the shipping address.

The manufacturer reserves the rights to change, modify, or eliminate from time to time, for technical or other reasons, certain or all data, specifications, or the product or products themselves, without any liability or obligation.

FRAME AND RELATED PARTS – SA74 & SA80

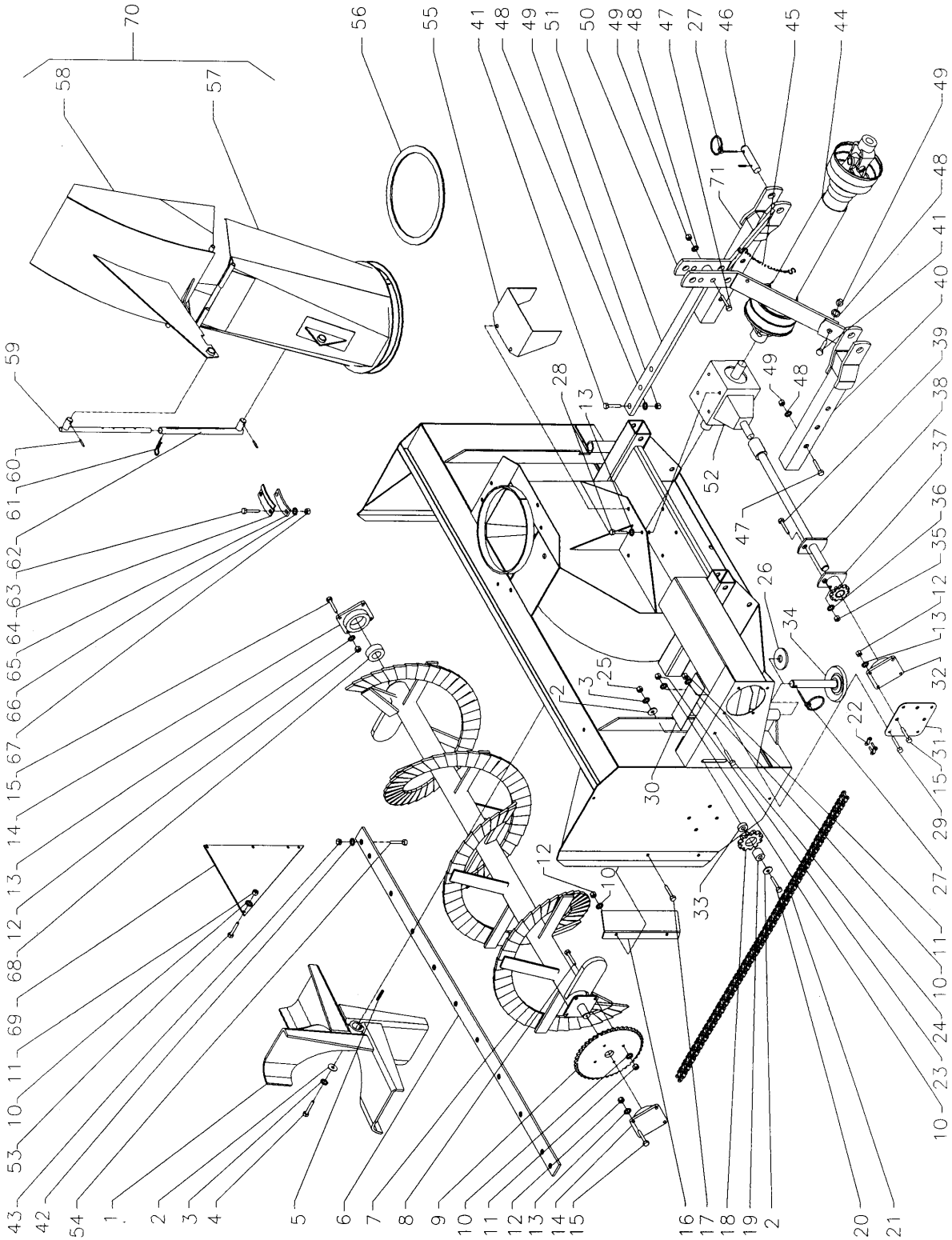

FRAME AND RELATED PARTS

REF.	DESCRIPTION	QTY	PART NUMBER	QTY	PART NUMBER
			SA74		SA80
1	Fan	1	664378	1	664378
2	Flat washer (11/16" dia. hole)	3	O/L	3	O/L
3	Lockwasher 5/8"	2	O/L	2	O/L
4	Hex. bolt (5/8" NC x 1 1/2")	1	O/L	1	O/L
5	Key (3/8" x 3/8" x 2 3/4" lg)	1	654174	1	654174
6	Cutting edge	1	664386	1	662684
7	Auger	1	664385	1	662677
8	Hex. bolt (3/8" NC x 1 1/4")	4	O/L	4	O/L
9	Sprocket 60A38 (1 1/4" dia. hole)	1	654007	1	654007
10	Lockwasher 3/8"	14	O/L	14	O/L
11	Hex. nut. (3/8" NC)	14	O/L	14	O/L
12	Hex. nut. (1/2" NC)	12	O/L	12	O/L
13	Lockwasher 1/2"	20	O/L	20	O/L
14	Bearing (1 1/4" dia. hole)	2	4300001	2	4300001
15	Hex. bolt (1/2" NC x 1 1/2")	12	O/L	12	O/L
16	Chain guard	1	655778	1	655778
17	Hex. bolt (3/8" NC x 1")	2	O/L	2	O/L
18	Idler sprocket	1	654010	1	654010
19	Bushing	1	656911	1	656911
20	Hex. bolt(5/8" NC x 5")	1	O/L	1	O/L
21	Chain (#60, including connecting link)	1	655788	1	655788
22	Half link #60	1	654025	1	654025
23	Wing nut (3/8’’ NC)	1	O/L	1	O/L
24	Carriage bolt (3/8" NC x 4 1/2")	1	O/L	1	O/L
25	Hex. Nut (5/8" NC)	1	O/L	1	O/L
26	Bushing	10	659393	10	659393
27	Linch pin	4	O/L	4	O/L
28	Hex. bolt(1/2’’ NC x 1’’)	8	O/L	8	O/L
29	Hex. bolt (3/8" NC x 3/4”)	4	O/L	4	O/L
30	Chain cover	1	662688	1	662688
31	Driving support	1	662687	1	662687
32	Bearing (1 1/4" dia. hole)	1	4300001	1	4300001
33	Bushing	1	656912	1	656912
34	Skid shoe	2	663591	2	663591
35	Hex. nut(5/16" NC)	1	O/L	1	O/L
36	Lock nut 5/16"	1	O/L	1	O/L
37	Shear plate	1	654024	1	654024
38	Drive shaft	1	664387	1	662837
39	Hex. bolt (5/16" NC x 2") gr.5	1	O/L	1	O/L
40	Lower left hitch	1	655780	1	655780
41	Hex. bolt (3/4" NC x 2")	3	O/L	3	O/L
42	Lockwasher 7/16"	11	O/L	11	O/L
43	Hex. nut(7/16" NC)	11	O/L	11	O/L

FRAME AND RELATED PARTS

REF.	DESCRIPTION	QTY	PART NUMBER	QTY	PART NUMBER
			SA74		SA80
44	Driveline	1	662538	1	662538
45	Chain with "S" hooks	1	654200	1	654200
46	Pin for 3 pt	2	655813	2	655813
47	Hex. bolt (3/4" NC x 4")	3	O/L	3	O/L
48	Lockwasher 3/4"	6	O/L	6	O/L
49	Hex. nut(3/4" NC)	6	O/L	6	O/L
50	Attaching plate	2	655779	2	655779
51	Upper hitch	1	655781	1	655781
52	Gear box	1	662195	1	662195
53	Hex. bolt (3/8" NC x 3/4")	4	O/L	4	O/L
54	Hex. bolt (7/16" NC x 1 1/2")	11	O/L	11	O/L
55	Driveline shield	1	654654	1	654654
56	Ring ‘’UHMW’’ 1/4"	1	662861	1	662861
57	Chute base	1	664481	1	664481
58	Deflector	1	654072	1	654072
59	Adjustment rod	1	654074	1	654074
60	Cotter pin (1/4’’ x 2’’)	2	O/L	2	O/L
61	Hair pin (5mm x 100mm lg.)	1	O/L	1	O/L
62	Adjustment tube	1	654076	1	654076
63	Hex. bolt (1/2" NC x 1 1/4")	4	O/L	4	O/L
64	Retaining plate	3	654077	3	654077
65	Spacer	3	661643	3	661643
66	Lockwasher 1/2"	4	O/L	4	O/L
67	Hex. nut(1/2" NC)	4	O/L	4	O/L
68	Bushing	1	655812	1	655812
69	Restriction plate	1	661821	1	661821
70	Assembled chute	1	664482	1	664482
71	Right lower hitch	1	655789	1	655789

SEMI-INDUSTRIAL CHUTE – KIT 9485

REF.	DESCRIPTION	QTY.	PART NUMBER
1	Deflector	1	664649
2	Middle deflector	1	654899
3	Chute base	1	664648
4	Hinge rod	2	654075
5	Flat washer (1/2" dia. hole)	6	O/L
6	Adjustment rod	1	654896
7	Cotter pin (1/8" dia. X 1")	6	O/L
8	Cotter pin (3/16" dia. X 1 1/2")	2	O/L
9	Adjustment arm	2	654895

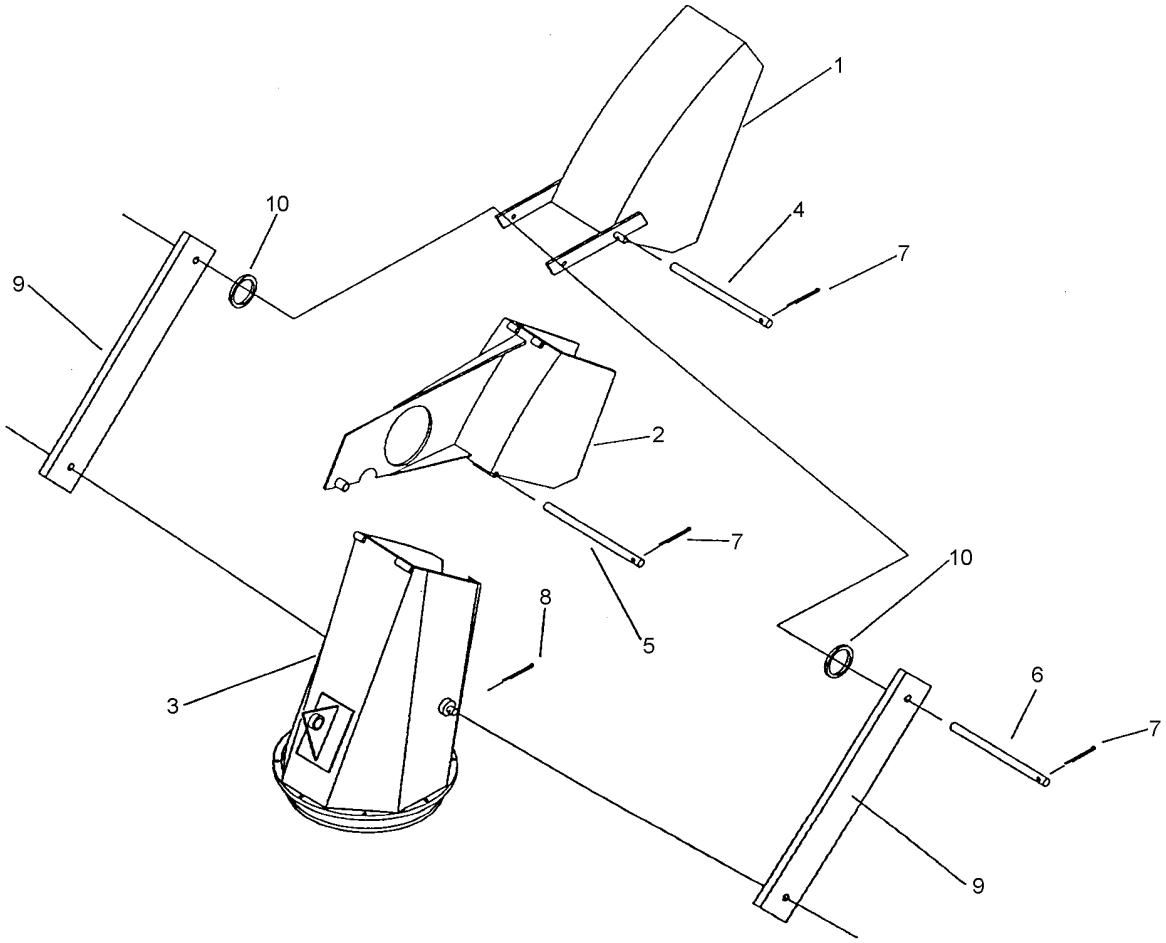

MANUAL ROTATION – KIT 8051

REF.	DESCRIPTION	QTY	PART NUMBER
1	Flat bar with attaching plate	1	664506
2	Hex. bolt (1/2"NC x 1 1/2")	1	O/L
3	Lockwasher 3/4"	1	O/L
4	Hex. nut (3/4"NC)	1	O/L
5	Flat washer 11/16"	2	O/L
6	Nylon hex. nut (5/8"NC)	1	O/L
7	Hex. nut (1/2"NC)	4	O/L
8	Lockwasher 1/2"	4	O/L
9	Hex. bolt (3/4"NC x 2 1/2")	1	O/L
10	Rotation bracket	1	664505
11	Hex. bolt (1/2"NC x 1 3/4")	1	O/L
12	Rotation tube	1	654187
13	Handle	1	654185
14	Hex. bolt (1/2"NC x 1 1/4")	2	O/L
15	Cable 3/16" x 152" LG	1	654201
16	Cable clamp	1	654202
17	Hex. bolt (5/8"NC x 2 1/2")	1	O/L
18	Nylon hex. nut (1/4"NC)	2	O/L
19	Pulley	1	654189
20	Hex. bolt (1/4"NC x 1 1/4")	1	O/L
21	Hex. bolt (1/4"NC x 1 1/2")	1	O/L

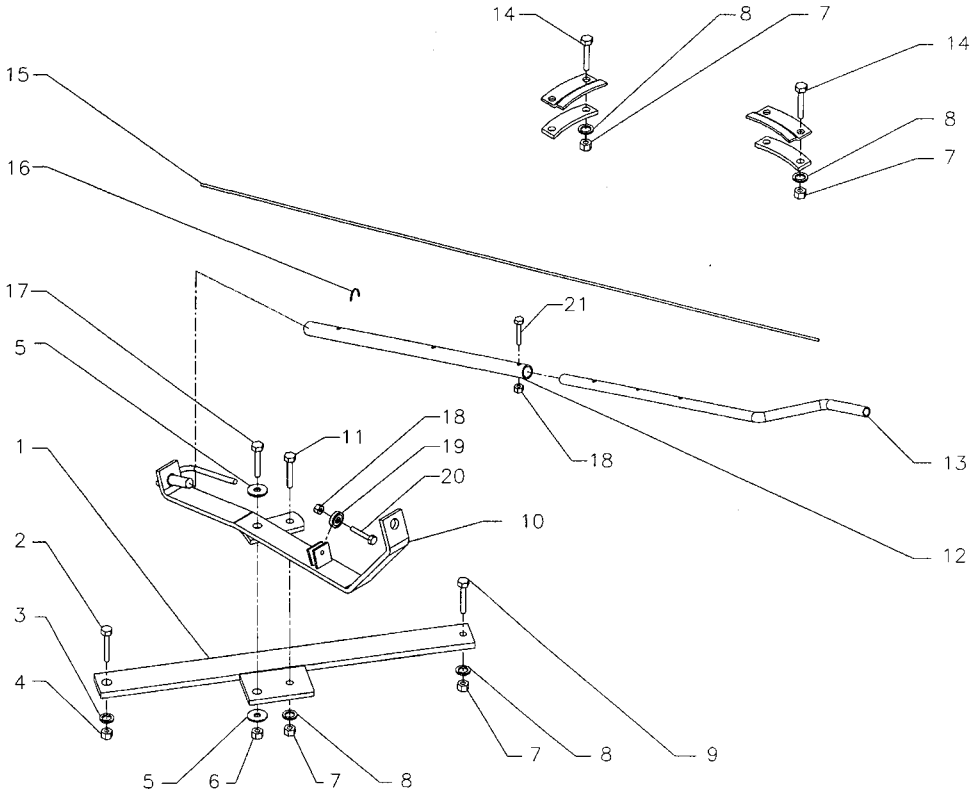

HYDRAULIC ROTATION BY CYLINDER- KIT 8046

REF.	DESCRIPTION	QTY	PART #
1	Cylinder Bracket	1	664475
2	Bell Crank	1	664473
3	Push Arm	1	664474
4	Spacer	1	664477
5	Bushing	1	664476
6	Flatwasher 7/16"	2	O/L
7	Hex. Nut 1/2" NC	3	O/L
8	Lockwasher 1/2"	3	O/L
9	Stover Nut 3/8" NC	2	O/L
10	Flatwasher 9/16"	3	O/L
11	Shoulder Screw 1/2" dia. x 3/4"lg, 3/8" NC	1	664577
12	Bolt hex. 3/4" NC x 4 1/2" (For B84 & B94 snowblowers only)	1	O/L
	Bolt hex. 3/4" NC x 5" (For SA74 & SA80 snowblowers only)	1	O/L
13	Bolt hex. 1/2" NC x 1 1/4"	3	O/L
14	Shoulder Screw 1/2" dia. x 1"lg, 3/8" NC	1	664578
15	Lockwasher 3/4"	1	O/L
16	Nut hex. 3/4" NC (For B84 & B94 only)	1	O/L

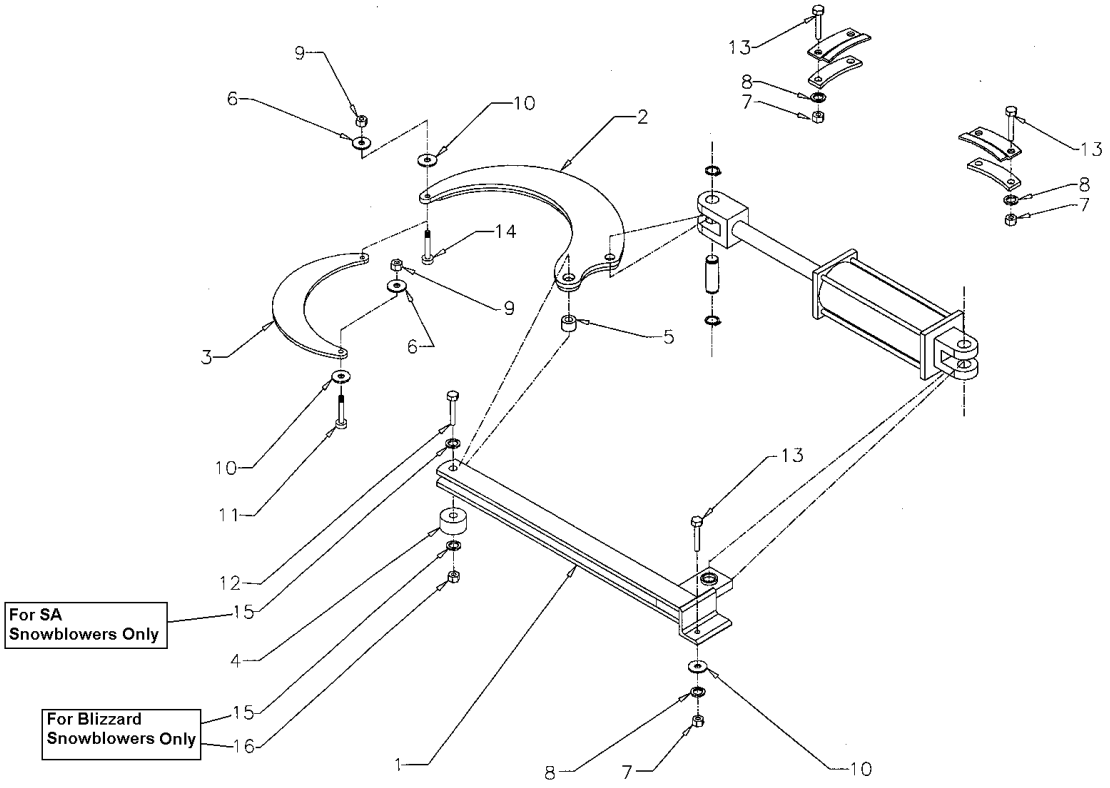

GEARBOX (662195)

REF.	DESCRIPTION	QTY.	PART NUMBER
1	Casing	1	656640
2	Oil seal (35 x 72 x 10)	1	656650
3	Snap ring	1	656652
4	Shim	2	656649
5	Bearing	1	656653
6	Sleeve	1	656648
7	Snap ring	1	656654
8	Bearing	1	656647
9	Shaft	1	656651
10	Gear	1	656645
11	Snap ring	1	656646
12	Bearing	2	656641
13	Shim	1	656644
14	Snap ring	2	656642
15	Oil seal (40 x 80 x 12)	2	656643
16	Shaft	1	662212
17	Gear	1	656657
18	Shim	1	656655
19	Filter plug	1	656662
20	Cover	1	656660
21	Hex.bolt (M10 x 14)	4	656659
22	Plug 3/8" NPT	2	655259

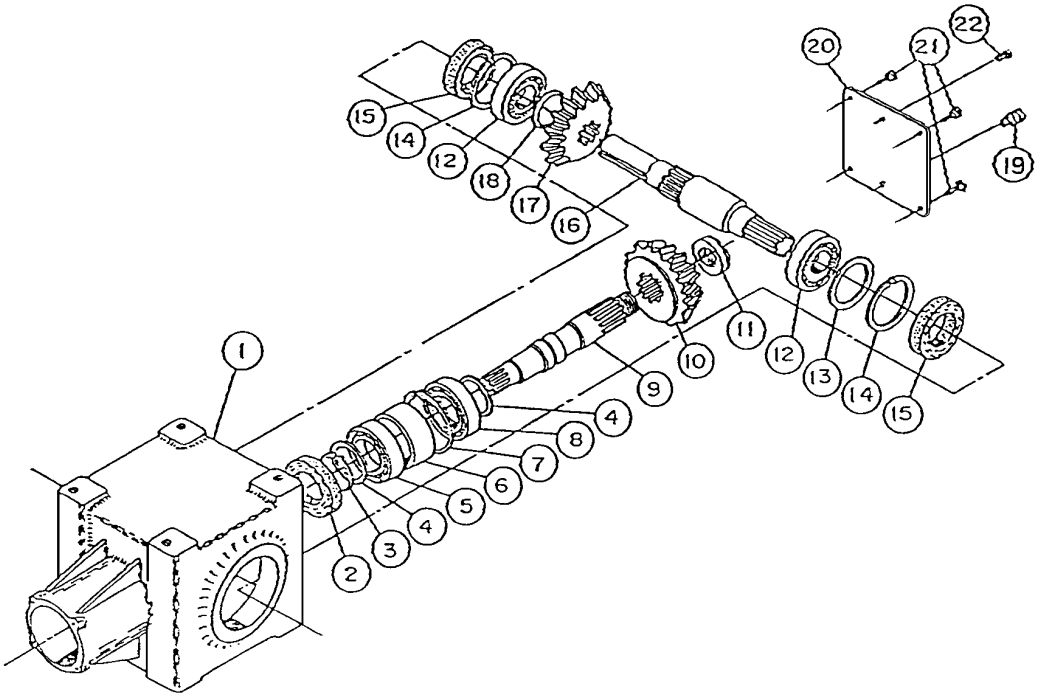

DRIVELINE (662538)

REF.	DESCRIPTION	QTY.	PART NUMBER
1	Push pin yoke assembly	1	663133
2	Universal joint kit	2	663134
3	Outer yoke	1	663136
4	Outer tube	1	663140
5	Inner tube	1	663142
6	Inner yoke	1	663144
7	Yoke and hub assembly	1	663145
8	Bolt and nut	2	662199
9	Grease fitting	1	663148
10	Ball	24	663162
11	Shear bolt and nut	1	663149
12	Shields with safety chain	1	663150
13	Safety pin	1	663151

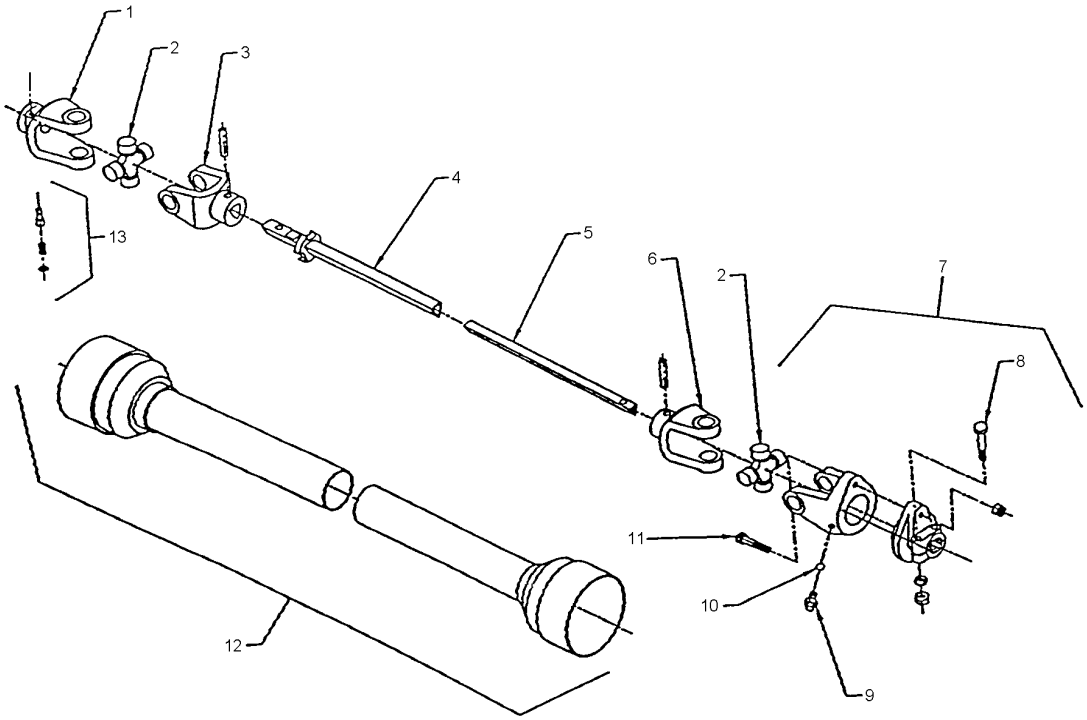

RAD TECHNOLOGIES INC.

RAD TECHNOLOGIES INC. warrants to the original buyer that the equipment is free from defects in material and workmanship. RAD TECHNOLOGIES INC.'s obligation, under this warranty, will be limited to the repair or replacement of any non-wear part or component, which RAD TECHNOLOGIES INC. finds to be defective within **one year** from the date of original purchase (unless otherwise-specified). The applicable warranty period for commercial or rental use shall be ninety (90) days from the date of purchase

In no event shall RAD TECHNOLOGIES INC. be liable for consequential, special, direct or indirect damages incurred by the buyer/user.

All components not manufactured by RAD TECHNOLOGIES INC. (such as motors, actuators, hydraulic components, tires, ...etc.) are covered by the original manufacturer's warranty in conjunction with RAD TECHNOLOGIES INC.

RAD's obligation under this warranty shall be limited to repairing or replacing, free of charge to the original purchaser, any part that, in RAD's judgment, shall show evidence of such defect, provided the **distributor** returns the part prepaid within thirty (30) days from date of failure.

This warranty shall not be interpreted to render RAD TECHNOLOGIES INC. liable for injuries or damages of any kind or nature to person or property. This warranty does not extend to losses because of delays, or to any expenses or losses incurred for labor, substitute machinery, rental or for any other reason.

Except as set forth above, RAD TECHNOLOGIES INC. shall have no obligation or liability of any kind on account of any of its equipment and shall not be liable for special or consequential damages. RAD TECHNOLOGIES INC. makes no other warranty, expressed or implied, and specifically, RAD TECHNOLOGIES INC. disclaims any implied warranty or merchantability or fitness for a particular purpose**. Some states or provinces do not permit limitations or exclusions of implied warranties or incidental or consequential damages, so the limitations or exclusions in this warranty may not apply.**

This warranty is subject to any existing conditions of supply, which may directly affect our ability to obtain materials or manufacture replacement parts. RAD TECHNOLOGIES INC. reserves the right to make improvements in design or changes in specifications at any time, without incurring any obligation to owners of units previously sold.

No one is authorized to alter, modify or enlarge this warranty nor the exclusions, limitations and reservations.

2835 Chemin de l'Aéroport, Thetford Mines (Québec) G6G 5R7
Tél.: (418) 338-4499 Fax: (418) 388-6090
Internet: www.radinter.com EMAIL: radtech@radinter.com

TORQUE SPECIFICATION TABLE

GENERAL SPECIFICATION TABLE
Use the following torques when special torques are not given
NOTE: These values apply to fasteners as received from supplier, dry, or when lubricated with normal engine oil. They do not apply if special graphited or moly sidulphide greases or other extreme pressure lubricants are used. This applies to both UNF and UNC threads.

SEE Grade No.		2				5				8			
BOLT HEAD IDENTIFICATION MARKS AS PER GRADE NOTE: MANUFACTURING MARKS WILL VARY.													
		Torque				Torque				Torque			
BOLT SIZES		Pounds-Foot		Newtons-Meter		Pounds-Foot		Newtons-Meter		Pounds-Foot		Newtons-Meter	
Inches	Millimeters	MIN.	MAX.	MIN.	MAX.	MIN.	MAX.	MIN.	MAX.	MIN.	MAX.	MIN.	MAX.
1/4	6.35	5	6	6.8	8.13	9	11.0	12.2	14.9	12	15	16.3	30.3
5/16	7.94	10	12	13.6	16.3	17	20.5	23.1	27.8	24	29	32.5	39.3
3/8	9.53	20	23	27.1	31.2	35	42.0	47.5	57.0	45	54	61.0	73.2
7/16	11.11	25	30	40.7	47.4	54	64.0	73.2	86.8	70	84	94.9	113.9
1/2	12.70	45	52	61.0	70.5	80	96.0	108.5	130.2	110	132	149.2	179.0
9/16	14.29	65	75	88.1	101.6	110	132.0	149.2	179.0	160	192	217.0	260.4
5/8	15.88	95	105	128.7	142.3	150	180	203.4	244.1	220	264	298.3	358.0
3/4	19.05	150	185	203.3	250.7	270	324	366.1	439.3	380	456	515.3	618.3
7/8	22.23	160	200	216.8	271.0	400	480	542.4	650.9	600	720	813.6	976.3
1	25.40	250	300	338.8	406.5	580	696	786.5	943.8	900	1080	1220.4	1464.5
1 1/8	25.58	-	-	-	-	800	880	1084.8	1193.3	1280	1440	1735.7	1952.6
1 1/4	31.75	-	-	-	-	1120	1240	1518.7	1681.4	1820	2000	2467.9	2712.0
1 3/8	34.93	-	-	-	-	1460	1680	1979.8	2278.1	2380	2720	3227.3	3688.3
1 1/2	38.10	-	-	-	-	1940	2200	2630.6	2983.2	3160	3560	4285.0	4827.4

METRIC BOLT TORQUE SPECIFICATIONS

		Coarse thread					Fine Thread				
Size of screw	Grade No.	Pitch (mm)	Pounds-Foot		Newtons-Meter		Pitch (mm)	Pounds-Foot		Newtons-Meter	
			MIN.	MAX.	MIN.	MAX.		MIN.	MAX.	MIN.	MAX.
M6	4T (4)	1.0	3.6	5.8	4.9	7.9	-	-	-	-	-
	7T (7)		5.8	9.4	7.9	12.7		-	-	-	-
	8T (8) (11)		7.2	10	9.8	13.6		-	-	-	-
M8	4T	1.25	7.2	14	9.8	19.0	1.0	12	17	16.3	23.0
	7T		17	22	23	29.8		19	27	25.7	36.6
	8T		20	26	27.1	35.2		22	31	29.8	42
M10	4T	1.5	20	25	27.1	33.9	1.25	20	29	27.1	39.3
	7T		34	40	46.1	54.2		35	47	47.4	63.7
	8T		38	46	51.5	62.3		40	52	54.2	70.5
M12	4T	1.75	28	34	37.9	46.1	1.25	31	41	42	55.6
	7T		51	59	69.1	79.9		56	68	75.9	92.1
	8T		57	66	77.2	89.4		62	75	84	101.6
M14	4T	2.0	49	56	66.4	75.9	1.5	52	64	70.5	86.7
	7T		81	93	109.8	126		90	106	122	143.6
	8T		96	109	130.1	147.7		107	124	145	168
M16	4T	2.0	67	77	90.8	104.3	1.5	69	83	93.5	112.5
	7T		116	130	157.2	176.2		120	138	162.6	187
	8T		129	145	174.8	196.5		140	158	189.7	214.1
M18	4T	2.0	88	100	119.2	136	1.5	100	117	136	158.5
	7T		150	168	203.3	227.6		177	199	239.8	269.6
	8T		175	194	237.1	262.9		202	231	273.7	313
M20	4T	2.5	108	130	146.3	176.2	1.5	132	150	178.9	203.3
	7T		186	205	252	277.8		206	242	279.1	327.9
	8T		213	249	288.6	337.4		246	289	333.3	391.6

Manufactured by:

RAD Technologies Inc.
2835, Chemin de l'Aéroport
Thetford Mines, Québec, Canada, G6G 5R7
Tel.: (418) 338-4499 - Fax.: (418) 338-6090
E-mail : radtech@radinter.com
Internet : www.radinter.com

Printed in Canada